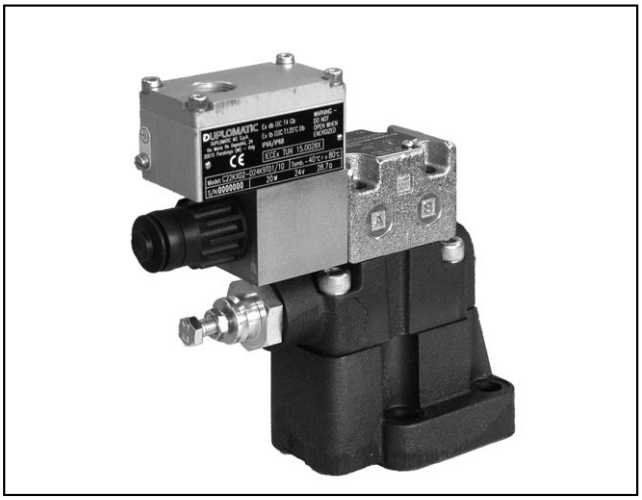

RQM*K*- P

EXPLOSION-PROOF SOLENOID OPERATED PRESSURE RELIEF VALVES WITH UNLOADING AND PRESSURE SELECTION ATEX, IECEx, INMETRO, PESO

SUBPLATE MOUNTING

RQM3K*-P ISO 6264-06
RQM5K*-P ISO 6264-08
RQM7K*-P ISO 6264-10

OPERATING PRINCIPLE

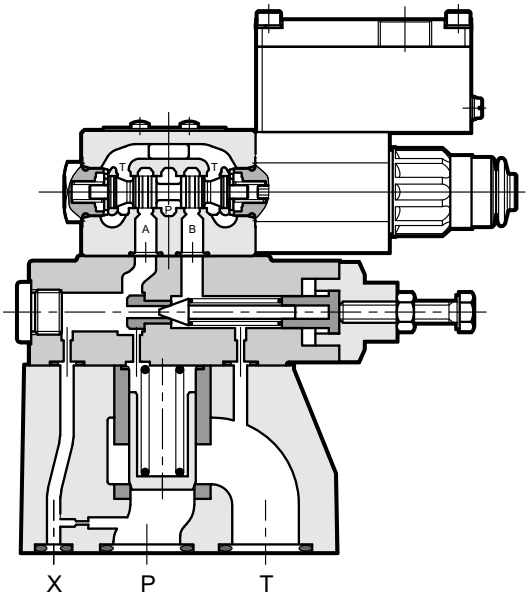

— The RQM*K*-P are explosion-proof pressure relief valves for subplate mounting ISO 6264. They are available in three nominal sizes for flows up to 500 l/min.

— They are compliant with ATEX, IECEx, INMETRO or PESO requirements and are suitable for use in potentially explosive atmospheres, for surface plants or mines.

— A low temperature version (up to -40 °C) is also available.

— They are available in five versions that allow the unloading of the total flow or the selection of up to three pressure values (see point 2 - Versions) by means of a solenoid valve.

— They are supplied with a hexagonal head adjustment screw. Upon request, it can be equipped with a SICBLOC adjustment knob on the main pressure control.

— The adjustment of the second and third pressure values is obtained by a pressure relief valve placed between the main stage and the solenoid valve.

— The valves are supplied with standard surface treatment of phosphating black for the main body and zinc-nickel for the pilot body. Upon request we can supply these valves completely with zinc-nickel surface treatment, suitable to ensure a salt spray resistance up to 600 h.

— Details for classification, operating temperatures and electrical characteristics are in the technical data sheet 02 500 'Explosion proof classification'.

PERFORMANCES

(obtained with mineral oil with viscosity of 36 cSt at 50°C)

		RQM3K*-P	RQM5K*-P	RQM7K*-P
Maximum operating pressure	bar	350		
Maximum flow rate	l/min	200	400	500
Temperature range (ambient and fluid)		see data sheet 02 500		
Fluid viscosity range	cSt	10 ÷ 400		
Fluid contamination degree		According to ISO 4406:1999 class 20/18/15		
Recommended viscosity	cSt	25		

1 - IDENTIFICATION CODE

R Q M _ _ - P _ / _ / _ / _ _ - _ K9 _ / _ _ _

Pilot operated pressure relief valve

Solenoid valve for unloading / pressure selection

Size:
3 = ISO 6264-06
5 = ISO 6264-08
7 = ISO 6264-10

Explosion-proof certification:
See table 1.1

Subplate mounting

Pressure adjustment range:
3 = up to 70 bar
5 = up to 210 bar
6 = up to 350 bar

Versions: **A**, **B**, **C**, **D**, **G** — see description in the table 2 - versions

M = adjustment with SICBLOC knob
available only on the main pressure control
Omit for adjustment with hexagonal head screw

Series No.
(the overall and mounting dimensions remain unchanged from 10 to 19)
10 = for versions A and B
11 = for versions C, D and G

Seals:
For temperature range -20 / +80 °C
N = NBR seals for mineral oil (**standard**)
V = FPM seals for special fluids
For temperature range -40 / +80 °C
NL = seal for low temperatures (for mineral oil)

Power supply:
Direct current (DC)
D12 = 12 V
D24 = 24 V
D48 = 48 V
D110 = 110 V
Alternate current with built-in rectifier bridge (RAC)
R120 = 120 V
R240 = 240 V

Coil electrical connection:
junction box

Connection type for cable gland
upper connection:
T01 = M20x1.5 - ISO 261
T02 = Gk 1/2 - UNI EN 10226-2
not available for INMETRO
T03 = 1/2" NPT - ANSI B1.20.1
(ex ANSI B2.1)
side connection:
S01 = M20x1.5 - ISO 261
S02 = Gk 1/2 - UNI EN 10226-2
not available for INMETRO
S03 = 1/2" NPT - ANSI B1.20.1
(ex ANSI B2.1)
S04 = M16x1.5 - ISO 261

Manual override:
CM = boot protected
standard for both N and V seals
not available for NL seals
CB = blind ring nut
standard for NL seals
available upon request for both N and V seals
see at par. 12

Option: **/T5**
version in T5 temperature class.
Omit if not required.

Option: surface treatment not standard. Omit if not required (see **NOTE**)

NOTE: Valves are supplied with standard surface treatment of phosphating black for the main body and zinc-nickel for the pilot body.

The full zinc-nickel surface treatment is available upon request. It is suitable to ensure a salt spray resistance up to 600 h (test operated according to UNI EN ISO 9227 standards and test evaluation operated according to UNI EN ISO 10289 standards).

For full zinc-nickel surface treatment add the suffix **/W7** at the end of the identification code.

Version with monobloc steel coil

Standard coils are made of zinc-nickel steel, with anodized aluminium junction box on it.

Monobloc coils **MD24K9S01** completely made of steel are available upon request. They have zinc-nickel treatment, power supply voltage D24 and cable gland connection type S01. Other variants for voltage and cable gland connection are available, always on request.

1.1 - Names of valves per certification

	ATEX		IECEx		INMETRO		PESO	
for gases for dusts	**KD2**	II 2GD	**KXD2**	IECEx Gb IECEx Db	**KBD2**	INMETRO Gb INMETRO Db	**KPD2**	PESO Gb not applicable for dust
for mines	**KDM2**	I M2	**KXDM2**	IECEx Mb	**KBDM2**	INMETRO Mb	not applicable for mines	

NOTE: Refer to the technical data sheet 02 500 for marking, operating temperatures and available versions.

2 - VERSIONS

RQM*K*-P*/**A**

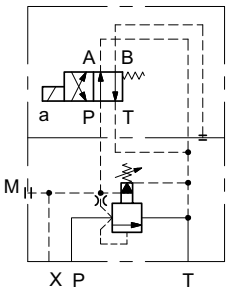

1 pressure setting and unloading with de-energized solenoid

RQM*K*-P*/**B**

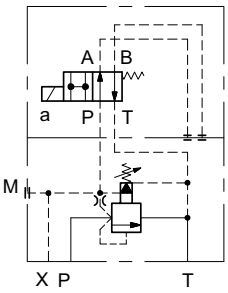

1 pressure setting and unloading with energized solenoid

RQM*K*-P*/**C**

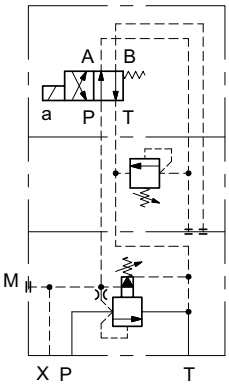

2 pressure settings The highest setting is reached with energized solenoid

RQM*K*-P*/**D**

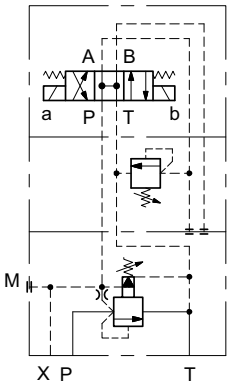

2 pressure settings and unloading with de-energized solenoids

RQM*K*-P*/**G**

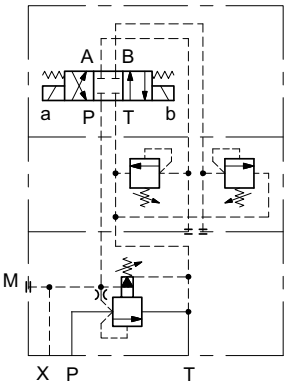

3 pressure settings The highest setting is reached with de-energized solenoids

3 - CHARACTERISTIC CURVES

(values obtained with viscosity of 36 cSt at 50°C)

ADJUSTMENT

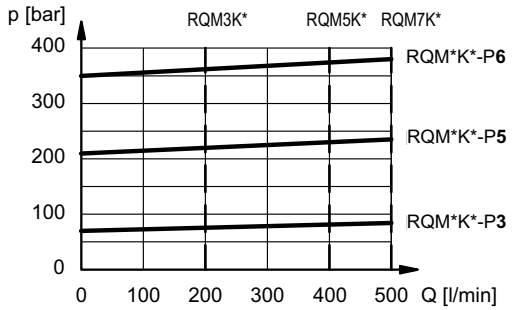

MINIMUM CONTROLLED PRESSURE

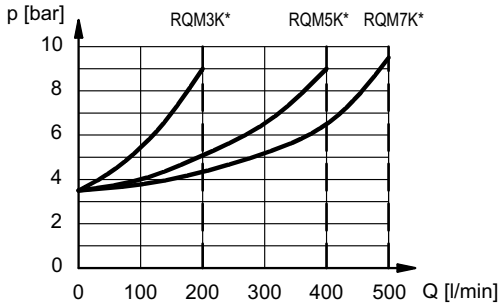

4 - ELECTRICAL CHARACTERISTICS

(values ± 5%)

Coil type	Nominal voltage [V]	Resistance at 20°C [Ω]	Current consumpt. [A]	Power consumpt. [W]
D12	12	7,2	1,7	20
D24	24	28,7	0,83	20
D48	48	115	0,42	20
D110	110	549	0,2	22

Coil type (**NOTE**)	Nominal voltage [V]	Freq. [Hz]	Resistance at 20°C [Ω]	Current consumpt. [A]	Power consumpt. [VA]
R120	110V-50Hz 120V-60Hz	50/60	489,6	0,19	21
				0,21	25
R240	230V-50Hz 240V-60Hz		2067,7	0,098	22,5
				0,1	24

NOTE: type R* coils are for alternating current supply for both 50 or 60 Hz. For R* coils the resistance can not be measured in the usual way because of the presence of diodes bridge inside the coil.

VOLTAGE SUPPLY FLUCTUATION (ripple included)	± 10% Vnom
MAX SWITCH ON FREQUENCY	6.000 ins/hour
DUTY CYCLE	100%
ELECTROMAGNETIC COMPATIBILITY (EMC)	According to 2014/30/EU
CLASS OF PROTECTION: Atmospheric agents Coil insulation (VDE 0580)	 IP66 / IP68 class H

4.1 - Wiring

In order to realise the electrical connection of the coil, it is necessary to access the terminal block (1) unscrewing the 4 screws (2) that fasten the cover (3) with the box (4) that contains the terminal block.

The electrical connection is polarity-independent.

By doing electrical connection it is important to connect also the grounding point (5) in the terminal block box (M4 screws), through suitable conductors with the general grounding line of the system.

On the external body of the coil there is a grounding point (6) (M4 screw) that allow to ensure equipotentiality between the valve and the general grounding line of the system; connecting this point the regulation of the EN 13463-1 standard, that impose to verify the equipotentiality of the elements included in a potentially explosive environment (the maximum resistance between the elements must be 100 Ω), is guaranteed.

At the end of the electrical wiring, it is necessary to reassemble the cover (3) on the box (4), checking the correct positioning of the seal located in the cover seat and fastening the 4 M5 screws with a torque of 4.9÷6 Nm.

Electrical wiring must be done following in compliance with standards about protection against explosion hazards.

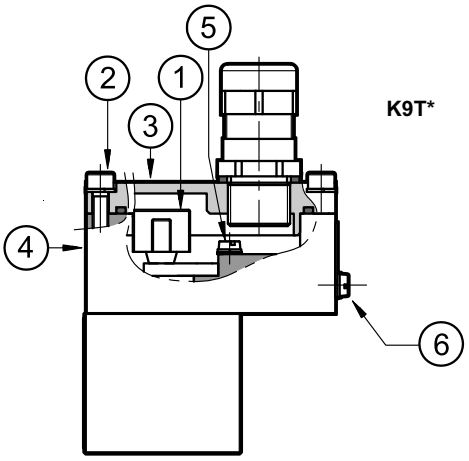

K9T*

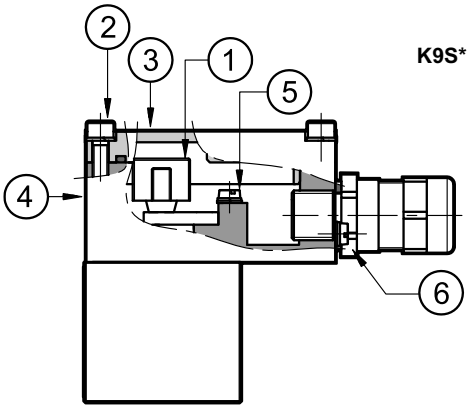

K9S*

Characteristics of the cables connectable for wiring are indicated in the table below:

Function	Cable section
Operating voltage cables connection	max 2.5 mm²
Connection for internal grounding point	max 2.5 mm²
Connection for external equipotential grounding point	max 6 mm²

Cables for wiring must be non-armoured cables, with external covering sheath and must be suitable for use in environments with temperatures from - 20 °C to +110 °C (for valves either with N or V seals) or from - 40 °C to +110 °C (for valves with NL seals).

Cable glands (which must be ordered separately, see point 14) allow to use cables with external diameter between 8 and 10 mm.

4.2 - Electrical diagrams

DC coil

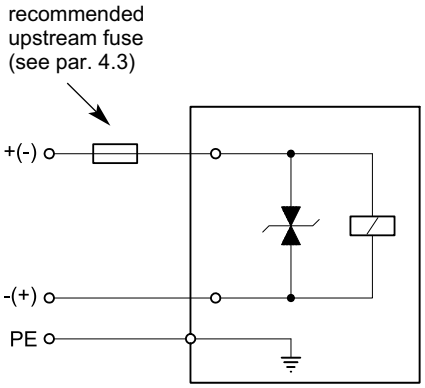

RAC coil

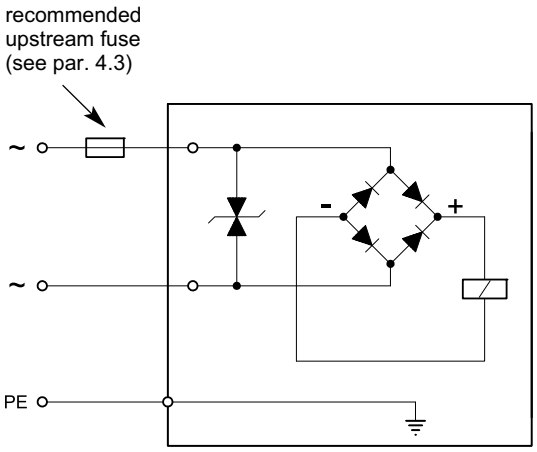

4.3 - Overcurrent fuse and switch-off voltage peak

Upstream of each valve, an appropriate fuse (max 3 x In according to IEC 60127) or a protective motor switch with short-circuit and thermal instantaneous tripping, as short-circuit protection, must be connected. The cut-off power of the fuse must correspond or exceed the short circuit current of the supply source. The fuse or the protective motor must be placed outside the dangerous area or they must be protected with an explosion-proof covering.

In order to safeguard the electronic device to which the valve is connected, there is a protection circuit in the coil, that reduces voltage peaks, which can occur when inductances are switched off.

The table shows the type of fuse recommended according to the nominal voltage of the valve and to the value of the voltage peaks reduction.

Coil type	Nominal voltage [V]	Rated current [A]	**Recommended pre-fuse characteristics medium time-lag according to DIN 41571 [A]**	Maximum voltage value upon switch off [V]	Suppressor circuit
D12	12	1,7	2,5	- 49	Transient voltage suppressor bidirectional
D24	24	0,83	1,25	- 49	
D48	48	0,42	0,6	- 81	
D110	110	0,2	0,3	- 309	
R120	120	0,21	0,3	- 3	
R240	240	0,1	0,15	- 3	

5 - RQM3K*-P WITH UPPER CONNECTION - OVERALL AND MOUNTING DIMENSIONS

dimensions in mm

RQM3K*-P*/G/10*-*K9T*

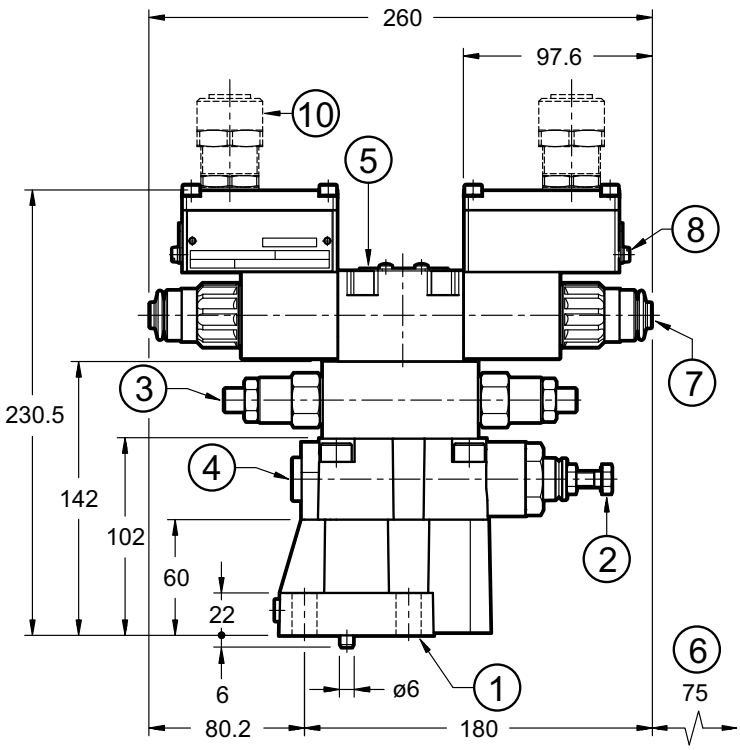

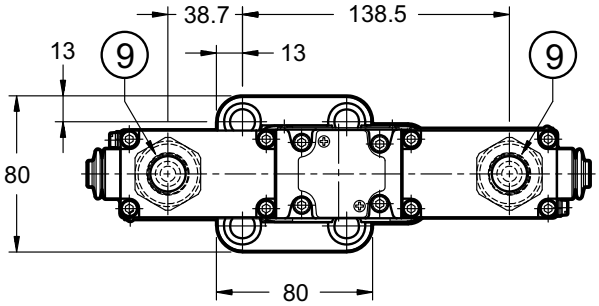

NOTE: for side connection cable gland see point 8.

RQM3K*-P*/A/10*-*K9T*
RQM3K*-P*/B/10*-*K9T*

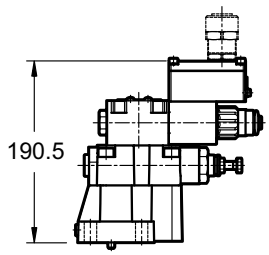

RQM3K*-P*/C/10*-*K9T*

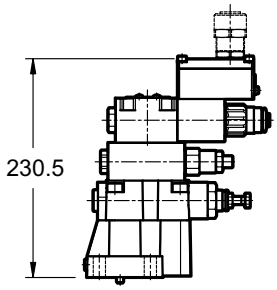

RQM3K*-P*/D/10*-*K9T*

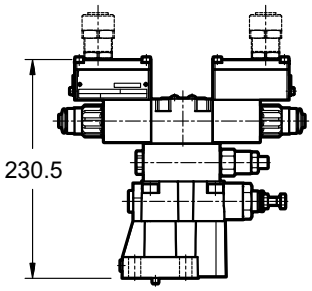

1	Mounting surface with sealing rings: 2 OR type 123 (17.86x2.62) 90 Shore 1 OR type 109 (9.13x2.62) 90 Shore
2	Hexagonal head adjustment screw for main pressure value: spanner 13 Clockwise rotation to increase pressure
3	Second value pressure adjustment valve. socket hex adjustment screw: hex key 6 locking nut: spanner 19 Clockwise rotation to increase pressure
4	Pressure gauge port 3/8” BSP

5	ISO 4401-03 solenoid valve for pressure selection / unloading with explosion-proof coils
6	Minimum clear space required
7	Manual override, boot protected (standard for both N and V seals) For blind ring nut dimensions (standard for NL seals) see par. 12
8	Terminal for supplementary earth connection
9	Upper port for cable gland
10	Cable gland . To be ordered separately, see point 14

Valve	Mass
RQM3K*-P*/A and RQM3K*-P*/B	5,3
RQM3K*-P*/C	6,4
RQM3K*-P*/D	7,3
RQM3K*-P*/G	7,4

Valve fastening: N. 4 SHC screws M12x40 ISO 4762
Tightening torque: 69 Nm (A8.8 screws)
Threads of mounting holes: M12x20

6 - RQM5K*-P WITH UPPER CONNECTION - OVERALL AND MOUNTING DIMENSIONS

dimensions in mm

RQM5K*-P*/G/10*-*K9T*

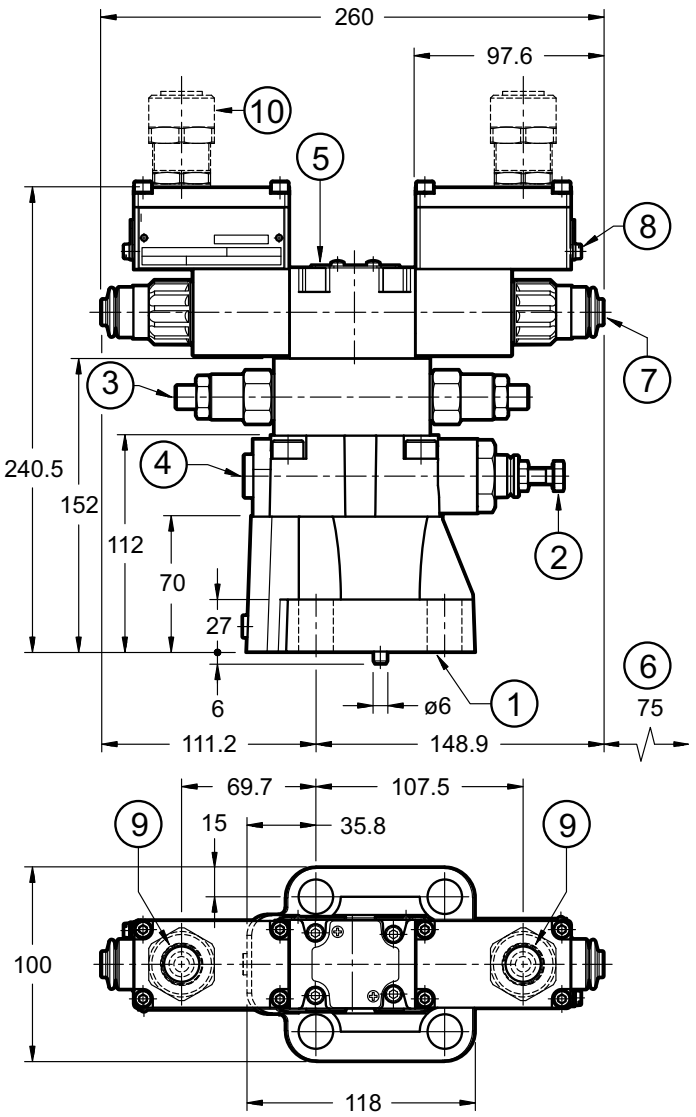

RQM5K*-P*/A/10*-*K9T*
RQM5K*-P*/B/10*-*K9T*

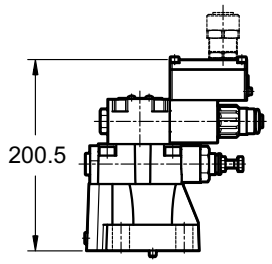

RQM5K*-P*/C/10*-*K9T*

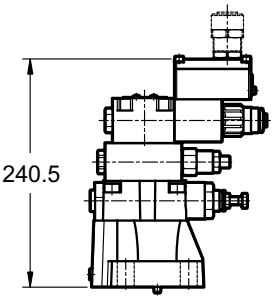

RQM5K*-P*/D/10*-*K9T*

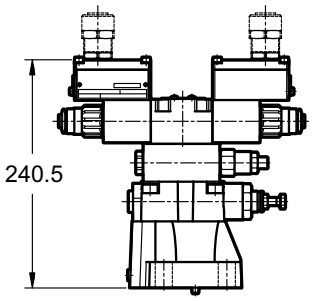

NOTE: for side connection cable gland see point 8.

1	Mounting surface with sealing rings: 2 OR type 3118 (29.82x2.62) 90 Shore 1 OR type 109 (9.13x2.62) 90 Shore
2	Hexagonal head adjustment screw for main pressure value: spanner 13 Clockwise rotation to increase pressure
3	Second value pressure adjustment valve. socket hex adjustment screw: hex key 6 locking nut: spanner 19 Clockwise rotation to increase pressure
4	Pressure gauge port 3/8” BSP

5	ISO 4401-03 solenoid valve for pressure selection / unloading with explosion-proof coils
6	Minimum clear space required
7	Manual override, boot protected (standard for both N and V seals) For blind ring nut dimensions (standard for NL seals) see par. 12
8	Terminal for supplementary earth connection
9	Upper port for cable gland
10	Cable gland. To be ordered separately, see point 14

Valve	Mass
RQM5K*-P*/A and RQM5K*-P*/B	6,3
RQM5K*-P*/C	7,4
RQM5K*-P*/D	8,3
RQM5K*-P*/G	8,4

Valve fastening: N. 4 SHC screws M16x50 ISO 4762
Tightening torque: 170 Nm (A8.8 screws)
Threads of mounting holes: M16x25

7 - RQM7K*-P WITH UPPER CONNECTION - OVERALL AND MOUNTING DIMENSIONS

RQM7K*-P*/G/10*-*K9T*

dimensions in mm

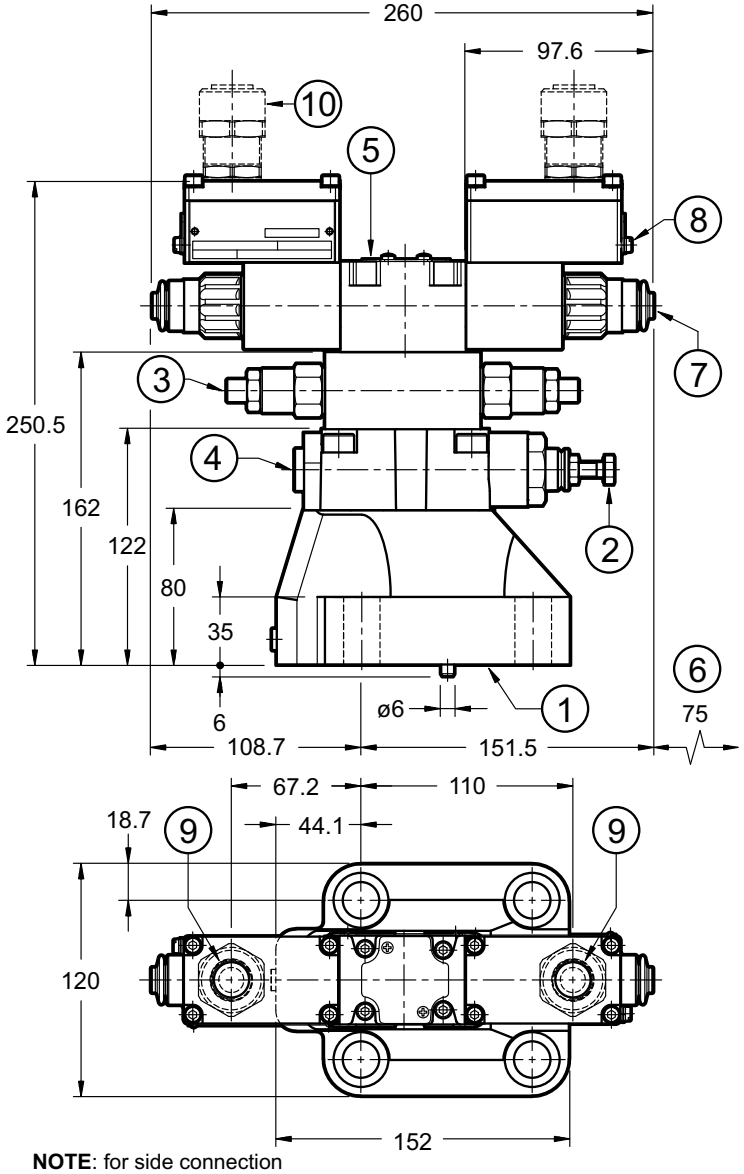

NOTE: for side connection cable gland see point 8.

RQM7K*-P*/A/10*-*K9T*
RQM7K*-P*/B/10*-*K9T*

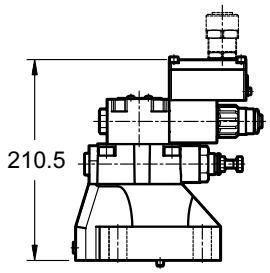

RQM7K*-P*/C/10*-*K9T*

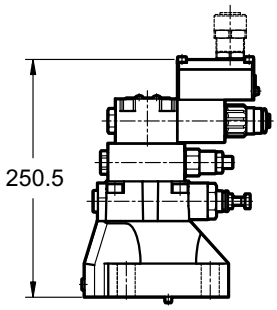

RQM7K*-P*/D/10*-*K9T*

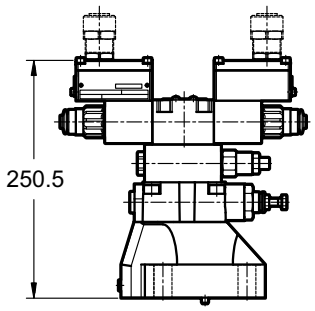

1	Mounting surface with sealing rings: 2 OR type 4137 (34.52x3.53) 90 Shore 1 OR type 109 (9.13x2.62) 90 Shore
2	Hexagonal head adjustment screw for main pressure value: spanner 13 Clockwise rotation to increase pressure
3	Second value pressure adjustment valve. socket hex adjustment screw: hex key 6 locking nut: spanner 19 Clockwise rotation to increase pressure
4	Pressure gauge port 3/8” BSP

5	ISO 4401-03 solenoid valve for pressure selection / unloading with explosion-proof coils
6	Minimum clear space required
7	Manual override, boot protected (standard for both N and V seals) For blind ring nut dimensions (standard for NL seals) see par. 12
8	Terminal for supplementary earth connection
9	Upper port for cable gland
10	Cable gland . To be ordered separately, see point 14

Valve	Mass
RQM7K*-P*/A and **RQM7K*-P*/B**	8,5
RQM7K*-P*/C	9,6
RQM7K*-P*/D	10,5
RQM7K*-P*/G	10,6

Valve fastening: N. 4 SHC screws M18x60 ISO 4762
Tightening torque: 235 Nm (A8.8 screws)
Threads of mounting holes: M18x27

8 - RQM*K*- P* SIDE CONNECTION OVERALL AND MOUNTING DIMENSIONS

dimensions in mm

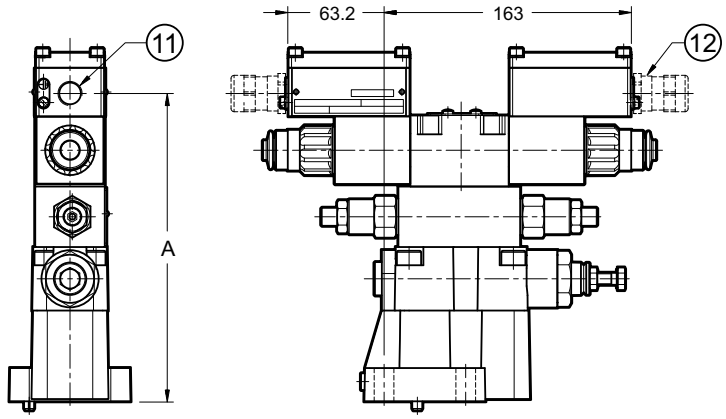

RQM3K*-P*/*/10*-*K9S*

Side port type	Dimension A	
	RQM3K*-P*/A RQM3K*-P*/B	RQM3K*-P*/C RQM3K*-P*/D RQM3K*-P*/G
S01, S04	162.5	202.5
S02, S03	162	202

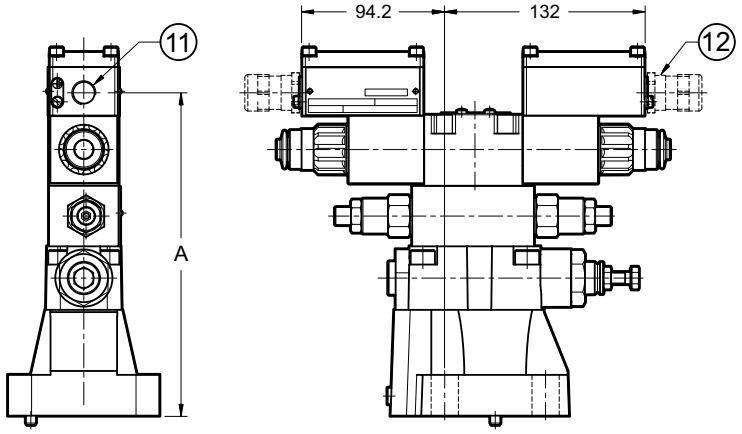

RQM5K*- P*/*/10*-*K9S*

Side port type	Dimension A	
	RQM5K*-P*/A RQM5K*-P*/B	RQM5K*-P*/C RQM5K*-P*/D RQM5K*-P*/G
S01, S04	172.5	212.5
S02, S03	172	212

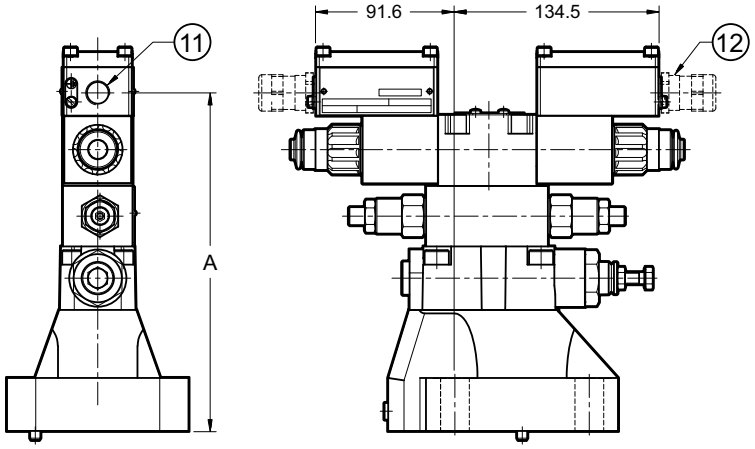

RQM7K*-P*/*/10*-*K9S*

Side port type	Dimension A	
	RQM7K*-P*/A RQM7K*-P*/B	RQM7K*-P*/C RQM7K*-P*/D RQM7K*-P*/G
S01, S04	182.5	222.5
S02, S03	182	222

11	Side port
12	Cable gland To be ordered separately, see par. 14

9 - MOUNTING SURFACES

RQM3K*-P

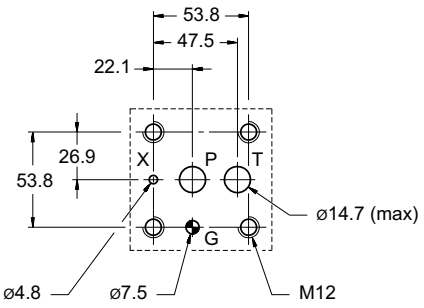

ISO 6264-06-09-*-97
(CETOP 4.4.2-2-R06-350)

RQM5K*-P

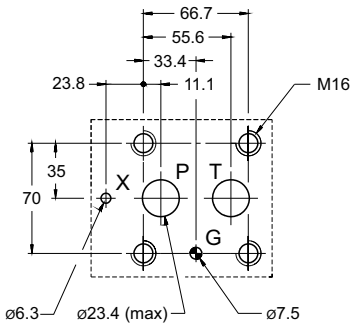

ISO 6264-08-13-*-97
(CETOP 4.4.2-2-R08-350)

RQM7K*-P

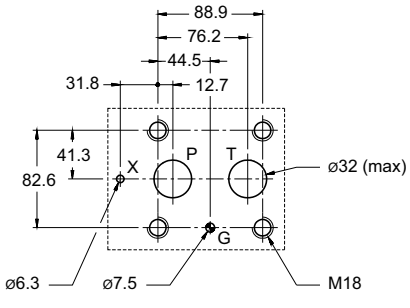

ISO 6264-10-17-*-97
(CETOP 4.4.2-2-R10-350)

10 - HYDRAULIC FLUIDS

Use mineral oil-based hydraulic fluids HL or HM type, according to ISO 6743-4. For these fluids, use NBR seals (code N). For fluids HFDR type (phosphate esters) use FPM seals (code V). For the use of other kinds of fluid such as HFA, HFB, HFC, please consult our technical department.

Using fluids at temperatures higher than 80 °C causes a faster degradation of the fluid and of the seals characteristics. The fluid must be preserved in its physical and chemical characteristics.

11 - INSTALLATION

Installation must adheres to instructions reported in the *Use and Maintenance manual*, always supplied with the valve. Unauthorized interventions can be harmful to people and goods because of the explosion hazards present in potentially explosive atmospheres.

The valves can be installed in any position without impairing correct operation.

Valve fastening takes place by means of screws or tie rods, laying the valve on a lapped surface, with values of planarity and smoothness that are equal to or better than those indicated in the drawing.

If the minimum values of planarity or smoothness are not met, fluid leakages between valve and mounting surface can easily occur.

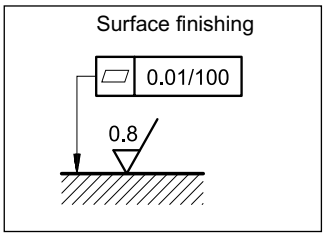

12 - MANUAL OVERRIDE CB

CB - Blind ring nut

The metal ring nut protects the solenoid tube from atmospheric agents and isolates the manual override from accidental operations. The ring nut is tightened on a threaded fastener that keeps the coil in its position even without the ring nut.

To access the manual override loosen the ring nut and remove it; then reassemble hand tightening, until it stops.

Activate the manual override always and only with non-sparking tools suitable for use in potentially explosive atmospheres.

More information on safe use of explosion-proof components are provided in the instruction manual, always supplied with the valve.

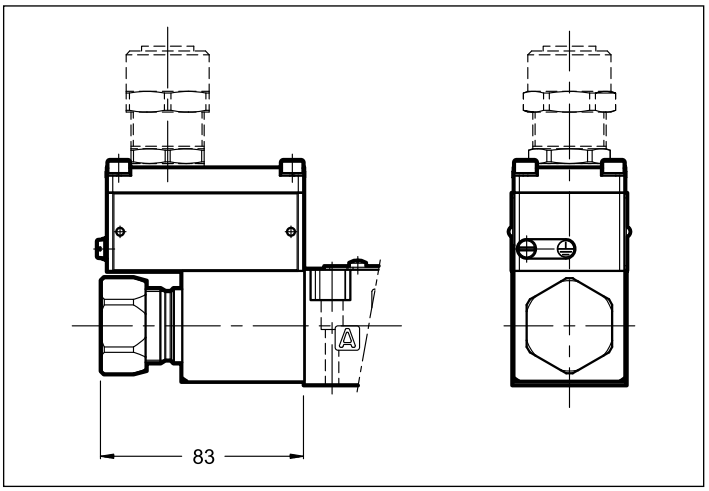

13 - ADJUSTMENT KNOB

The valves can be equipped with a SICBLOC adjustment knob, only on the main pressure regulation. To operate it, push and rotate at the same time.

To request this option, add: **/M** (see point 1).

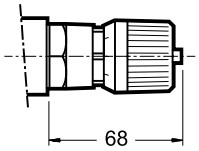

14 - CABLE GLANDS

Cable glands must be ordered separately; Duplomatic offers some types of cable glands with the following features:

- version for non-armoured cable, external seal on the cable (suitable for Ø 8÷10 mm cables);
- ATEX II 2GD, I M2; IECEx Gb, Db, Mb;
- cable gland material: nickel brass
- internal rubber tip material: silicone
- ambient temperature range: -65 ºC ÷ +220 ºC
- protection degree: IP66/IP68

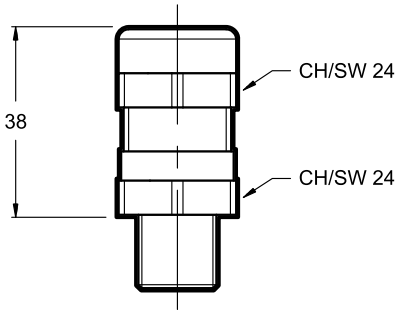

To order the desired cable glands, specify description, code and quantity.

Description: CGK2/NB-01/10

Code: 3908108001

M20x1.5 - ISO 261 male thread, suitable for coils with T01 and S01 connections. It is supplied equipped with copper washer, that must be assembled between the cable gland and the coil, so as to ensure IP66/IP68 protection degree.

Tightening torque: 45 ÷ 50 Nm

Description: CGK2/NB-02/10

Code: 3908108002

Gk 1/2 - UNI EN 10226-2 male thread, suitable for coils with T02 and S02 connections. The customer must apply LOCTITE® 243™ threadlocker or similar between the cable gland connection thread and the coil in order to ensure IP66/IP68 protection degree.

Tightening torque: 20 ÷ 25 Nm

Description: CGK2/NB-03/10

Code: 3908108003

1/2” NPT - ANSI B1.20.1 (ex ANSI B2.1), suitable for coils with T03 and S03 connections. The customer must apply LOCTITE® 243™ threadlocker or similar between the cable gland connection thread and the coil in order to ensure IP66/IP68 protection degree.

Tightening torque: 20 ÷ 25 Nm

Description: CGK2/NB-04/10

Code: 3908108004

M16x1.5 - ISO 261 male thread, suitable for coils with S04 connection. It is supplied equipped with copper washer, that must be assembled between the cable gland and the coil, so as to ensure IP66/IP68 protection degree.

Tightening torque: 45 ÷ 50 Nm

15 - SUBPLATES

(see catalogue 51 000)

	RQM3K*-P	RQM5K*-P	RQR7K*-P
Type	PMRQ3-AI4G rear ports	PMRQ5-AI5G rear ports	PMRQ7-AI7G rear ports
P, T ports dimension	P: 1/2” BSP T: 3/4” BSP	1” BSP	1” 1/4 BSP
X port dimension	1/4” BSP	1/4” BSP	1/4” BSP

NOTE: Subplates (to be ordered separately) do not contain neither aluminium nor magnesium at a rate higher than the value allowed by norms according to ATEX directive for category II 2GD and I M2.

The user will bear to do the complete assessment of the ignition risk that can occur from the relative use in potentially explosive environments.

DUPLOMATIC MS S.p.A.
via M. Re Depaolini 24 ▪ 20015 PARABIAGO (MI) ▪ ITALY
tel. +39 0331.895.111 ▪ www.duplomatic.com ▪ e-mail: sales.exp@duplomatic.com

EXPLOSION-PROOF CLASSIFICATION for

SOLENOID AND PROPORTIONAL VALVES

ref. catalogues:

pressure control valves

RQM*K*-P	**21 515**
P*E*K*	**81 316**
ZDE3K*	**81 515**
DZCE*K*	**81 606**

flow control valves

QDE3K*	**82 225**

directional valves

D*K*	**41 515**
DT3K*	**42 215**
DS(P)E*K*	**83 510**

GENERAL INFO

This informative technical datasheet displays information about **classification and marking** of Duplomatic explosion-proof valves range.

Duplomatic MS offers valves with the following certifications:

ATEX	**II 2G**	**II 2D**	**I M2**
IECEx	**Gb**	**Db**	**Mb**
INMETRO	**Gb**	**Db**	**Mb**
PESO	**Gb**		

Instructions for use and maintenance can be found in the related manuals, always supplied toghether with valves.

1 - ATEX CLASSIFICATION AND TEMPERATURES

Duplomatic certificates the combination valve-coil for the valves suitable for application and installation in potentially explosive atmospheres, according to ATEX directive; the supply always includes the declaration of conformity to the directive and the operating and maintenance manual, that contains all the information needed for a correct use of the valve in potentially explosive environments.

Coils assembled on these valves have been separately certified according to ATEX directive and so they are suitable for use in potentially explosive atmospheres.

1.1 - ATEX classification for valves

Type examination certificate: AR18ATEX055
The valves are suitable for applications and installations in potentially explosive atmospheres that fall within:

ATEX II 2G ATEX II 2D	***KD2**	equipment intended for use in areas in which explosive atmospheres caused by gases, vapours, mists or air/dust mixtures are likely to occur occasionally.The means of protection relating to equipment in this category ensure the requisite level of protection, even in the event of frequently occurring disturbances or equipment faults which normally have to be taken into account.
ATEX I M2	***KDM2**	equipment intended for use in underground parts of mines as well as those parts of surface installations of such mines likely to be endangered by firedamp and/or combustible dust. This equipment is intended to be de-energised in the event of an explosive atmosphere.

1.2 - ATEX marking for valves

valve code		N and V seals	NL seals
***KD2**	for gas	Ex II 2G IIC T4 Gb (-20°C Ta +80°C)	Ex II 2G IIC T4 Gb (-40°C Ta +80°C)
	for dusts	Ex II 2D IIIC T154°C Db IP66/IP68 (-20°C Ta +80°C)	Ex II 2D IIIC T154°C Db IP66/IP68 (-40°C Ta +80°C)
***KD2 /T5**	for gas	Ex II 2G IIC T5 Gb (-20°C Ta +55°C)	Ex II 2G IIC T5 Gb (-40°C Ta +55°C)
	for dusts	Ex II 2D IIIC T129°C Db IP66/IP68 (-20°C Ta +55°C)	Ex II 2D IIIC T129°C Db IP66/IP68 (-40°C Ta +55°C)
***KDM2**	mining	Ex I M2 I T150°C Mb IP66/68 (-20°C Ta +75°C)	Ex I M2 I T150°C Mb IP66/68 (-40°C Ta +75°C)

Specific marking as ATEX 2014/34/EU directive and related technical specifications

Ex | | | | T | b | IP66/IP66 | (- °C Ta + °C)

Ambient temperature range

Group:
I = mining equipment
II = for surface plants

Protection degree from atmospheric agents according to IEC EN 60529
(this field is not intended for category 2G)

Category of protection:
M2 = (mining) high protection
This equipment is intended to be de-energised in the event of an explosive atmosphere
2G = (surface, atmosphere with gas)
high protection
eligible for category 2 (zone 1)
automatically liable for category 3 (zone 2)
2D = (surface, atmosphere with dusts)
high protection
eligible for category 2 (zone 21)
automatically liable for category 3 (zone 22)

EPL - protection level for electrical devices
Mb = for mines - having a "high" level of protection, which has sufficient security that it is unlikely to become a source of ignition in normal operation or during expected malfunctions in the time span between there being an outbreak of gas and the equipment being de-energized.
Gb = for explosive gas atmospheres - having a "high" level of protection, which is not a source of ignition in normal operation or during expected malfunctions.
Db = equipment for explosive dust atmospheres - having a "high" level of protection, which is not a source of ignition in normal operation or during expected malfunctions

Temperature class / max surface temperature see par. 1.5

Group of gas / dusts for which the equipment is certified
I = for mining: firedamp and/or combustible dusts
IIC = for gas - eligible also for group IIA and IIB
IIIC = for dusts - eligible also for group IIIA and IIIB

1.3 - ATEX classification of the coils

The coil of the explosion-proof valves is ATEX certified itself an as such is identified with its own tag, carries the relative ATEX marking. The mechanical construction of the coil housing is made in order to ensure its resistance to possible internal explosion and to avoid any explosion propagation to the outside environment, matching an “Ex db” type protection (explosion-proof coil).

Moreover, the solenoid is designed to maintain its surface temperature below the limits specified to the relevant class.

1.4 - ATEX marking on coils

for valve type ***KD2**	for gas	Ex II 2G Ex db IIC T4 Gb (-40°C Ta +80°C)
	for dusts	Ex II 2D Ex tb IIIC T154°C Db IP66/IP68 (-40°C Ta +80°C)
for valve type ***KD2 /T5**	for gas	Ex II 2G Ex db IIC T5 Gb (-40°C Ta +55°C)
	for dusts	Ex II 2D Ex tb IIIC T129°C Db IP66/IP68 (-40°C Ta +55°C)
for valve type ***KDM2**	mining	Ex I M2 Ex db I T150°C Mb IP66/IP68 (-40°C Ta +75°C)

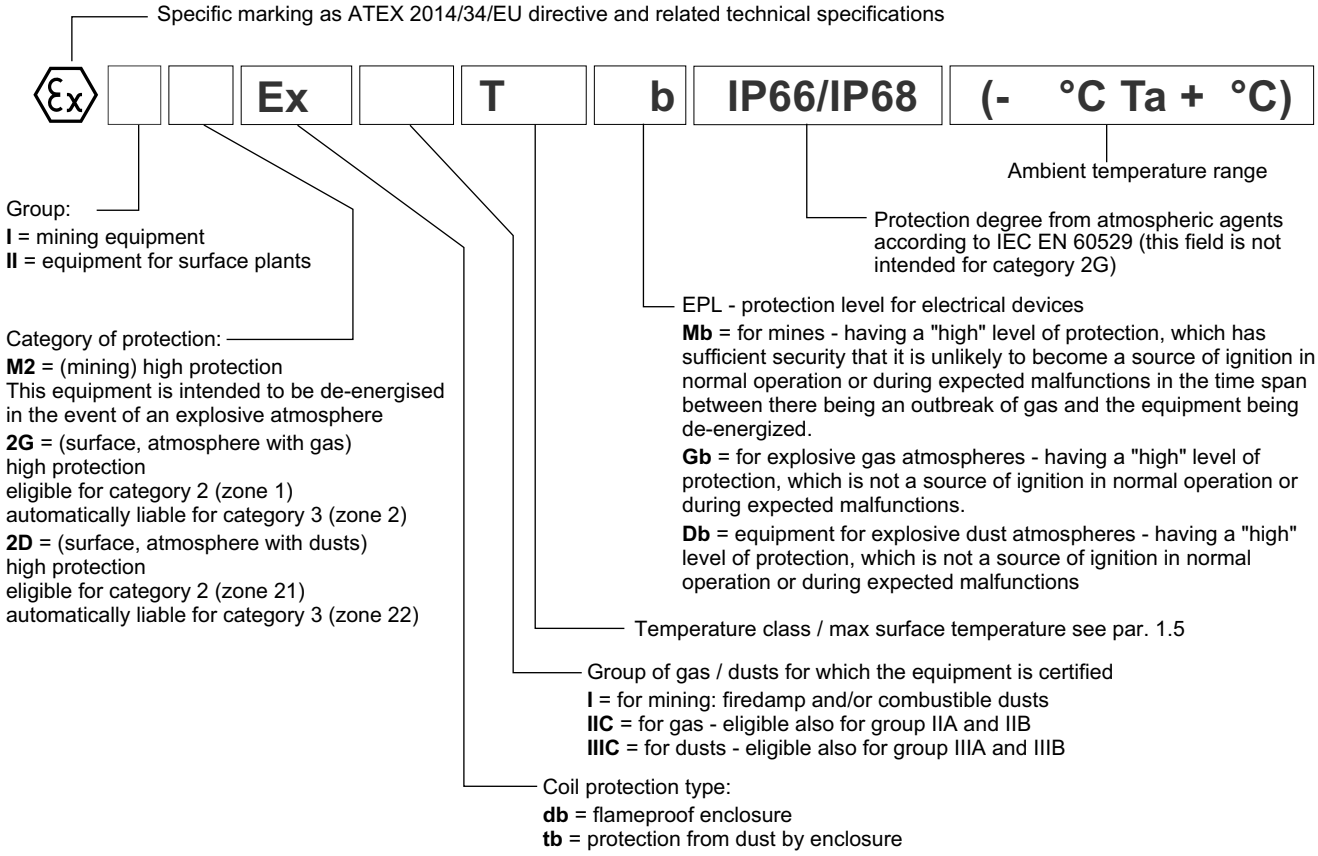

1.5 - Operating temperatures

These valves are classified according to their maximum surface temperature (EN 13463-1), which must be lower than the ignition temperature of the gases, vapors and dusts for which the area in which they will be used is classified.

The valves in group II can also be used for less limiting temperature classes (surface temperature allowed higher).

		temperature range	N and V seals	NL seals	Temperature class	eligible also for
ATEX II 2G ATEX II 2D	***KD2**	of ambient	-20 / +80 °C	-40 / +80 °C	T4 (gas) T154°C (dusts)	T3, T2, T1 T200°C and higher
		of fluid				
	***KD2 /T5**	of ambient	-20 / +55 °C	-40 / +55 °C	T5 (gas) T129°C (dusts)	T4, T3, T2, T1 T135°C and higher
		of fluid	-20 / +60 °C	-40 / +60 °C		
ATEX I M2	***KDM2**	of ambient	-20 / +75 °C	-40 / +75 °C	T150°C	-
		of fluid				

2 - IECEX CLASSIFICATION AND TEMPERATURES

The IECEx certification requires the classification of the electrical equipment only.

Duplomatic supplies valves with IECEx certified coils, suitable for application and installation in potentially explosive atmospheres. The mechanical construction of the coil housing is made in order to ensure its resistance to possible internal explosion and to avoid any explosion propagation to the outside environment, matching an “Ex db” type protection (explosion-proof coil).

Moreover, the solenoid is designed to maintain its surface temperature below the limits specified to the relevant class.

The supply always includes the operating and maintenance manual, that contains all the information needed for a correct use of the valve in potentially explosive environment.

2.1 - IECEx classification

Certificate of conformity (CoC): IECEx TUN 15.0028X
The valves are suitable for applications and installations in potentially explosive atmospheres that fall within:

IECEx Gb IECEx Db	***KXD2**	equipment intended for use in areas in which explosive atmospheres caused by gases, vapours, mists or air/dust mixtures are likely to occur occasionally.The means of protection relating to equipment in this category ensure the requisite level of protection, even in the event of frequently occurring disturbances or equipment faults which normally have to be taken into account.
IECEx Mb	***KXDM2**	equipment intended for use in underground parts of mines as well as those parts of surface installations of such mines likely to be endangered by firedamp and/or combustible dust. This equipment is intended to be de-energised in the event of an explosive atmosphere.

2.2 - IECEx marking

There is a plate with the IECEx mark on each coil.

***KXD2** valves	for gas	Ex db IIC T4 Gb (-40°C Ta +80°C)
	for dusts	Ex tb IIIC T135°C Db (-40°C Ta +80°C)
***KXD2 /T5** valves	for gas	Ex db IIC T5 Gb (-40°C Ta +55°C)
	for dusts	Ex tb IIIC T100°C Db (-40°C Ta +55°C)
***KDM2** valves	mining	Ex db I Mb (-40°C Ta +80°C)

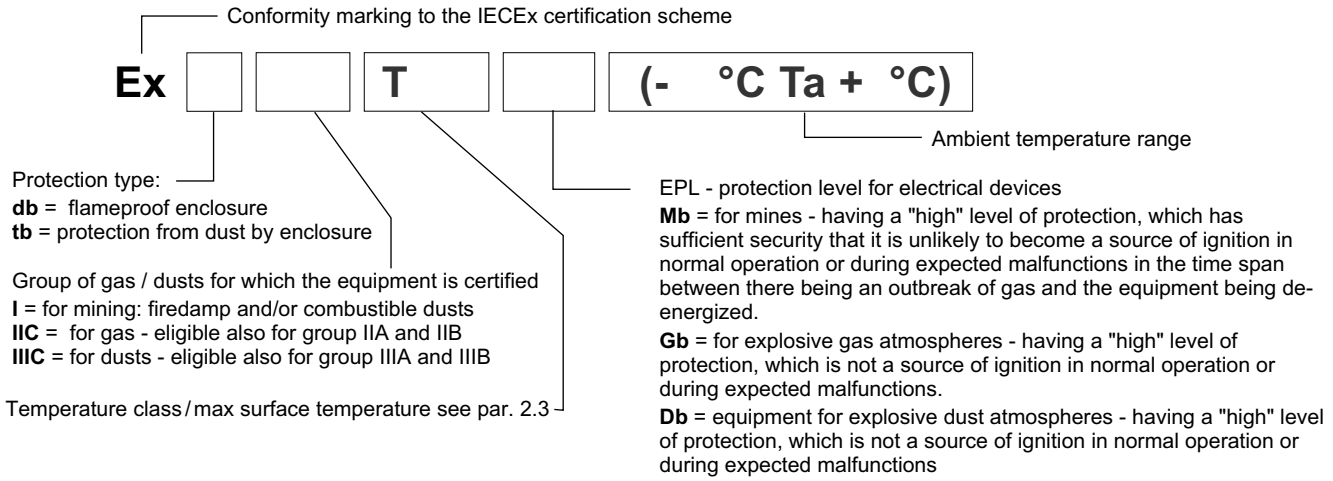

2.3 - Operating temperatures

These valves are classified according to their maximum surface temperature (EN 13463-1), which must be lower than the ignition temperature of the gases, vapors and dusts for which the area in which they will be used is classified.

Valves for surface plants can also be used for less limiting temperature classes (higher surface temperature allowed).

		temperature range	**N and V seals**	**NL seals**	Temperature class	eligible also for
IECEx Gb IECEx Db	***KXD2**	of ambient	-20 / +80 °C	-40 / +80 °C	T4 (gas) T135°C (dusts)	T3, T2, T1 T200°C and higher
		of fluid				
	***KXD2 /T5**	of ambient	-20 / +55 °C	-40 / +55 °C	T5 (gas) T100°C (dusts)	T4, T3, T2, T1 T135°C and higher
		of fluid	-20 / +60 °C	-40 / +60 °C		
IECEx Mb	***KXDM2**	of ambient	-20 / +80 °C	-40 / +80 °C	-	-
		of fluid				

3 - INMETRO CLASSIFICATION AND TEMPERATURES

The INMETRO certification requires the classification of the electrical equipment only.

Duplomatic supplies valves with INMETRO certified coils, suitable for application and installation in potentially explosive atmospheres. The mechanical construction of the coil housing is made in order to ensure its resistance to possible internal explosion and to avoid any explosion propagation to the outside environment, matching an “Ex db” type protection (explosion-proof coil).

Moreover, the solenoid is designed to maintain its surface temperature below the limits specified to the relevant class.

The supply always includes the operating and maintenance manual, that contains all the information needed for a correct use of the valve in potentially explosive environment.

3.1 - INMETRO classification

Certificate of conformity: DNV 15.0094 X
The valves are suitable for applications and installations in potentially explosive atmospheres that fall within:

INMETRO Gb INMETRO Db	***KBD2**	equipment intended for use in areas in which explosive atmospheres caused by gases, vapours, mists or air/dust mixtures are likely to occur occasionally.The means of protection relating to equipment in this category ensure the requisite level of protection, even in the event of frequently occurring disturbances or equipment faults which normally have to be taken into account.
INMETRO Mb	***KBDM2**	equipment intended for use in underground parts of mines as well as those parts of surface installations of such mines likely to be endangered by firedamp and/or combustible dust. This equipment is intended to be de-energised in the event of an explosive atmosphere.

3.2 - INMETRO marking

There is a plate with the INMETRO mark on each coil.

***KBD2** valves	for gas	Ex db IIC T4 Gb (-40°C Ta +80°C)
	for dusts	Ex tb IIIC T154°C Db IP66/IP68 (-40°C Ta +80°C)
***KBD2 /T5** valves	for gas	Ex db IIC T5 Gb (-40°C Ta +55°C)
	for dusts	Ex tb IIIC T129°C Db IP66/IP68 (-40°C Ta +55°C)
***KBDM2** valves	mining	Ex db I T150° Mb IP66/IP68 (-40°C Ta +75°C)

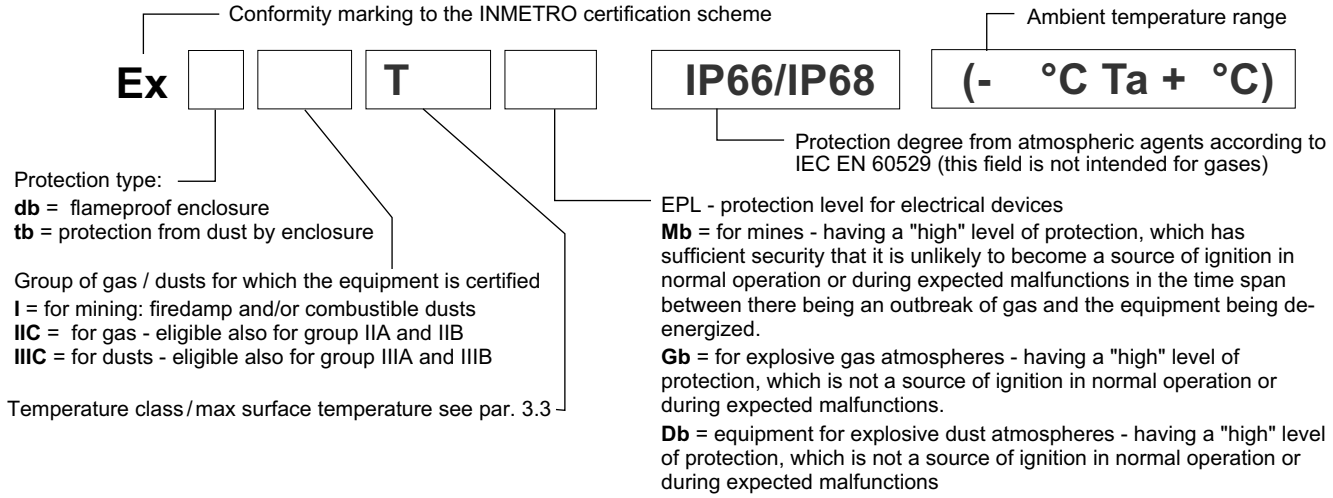

3.3 - Operating temperatures

These valves are classified according to their maximum surface temperature (EN 13463-1), which must be lower than the ignition temperature of the gases, vapors and dusts for which the area in which they will be used is classified.

Valves for surface plants can also be used for less limiting temperature classes (higher surface temperature allowed).

		temperature range	**N and V seals**	**NL seals**	Temperature class	eligible also for
INMETRO Gb INMETRO Db	***KBD2**	of ambient	-20 / +80 °C	-40 / +80 °C	T4 (gas) T154°C (dusts)	T3, T2, T1 T200°C and higher
		of fluid				
	***KBD2 /T5**	of ambient	-20 / +55 °C	-40 / +55 °C	T5 (gas) T129°C (dusts)	T4, T3, T2, T1 T135°C and higher
		of fluid	-20 / +60 °C	-40 / +60 °C		
INMETRO Mb	***KBDM2**	of ambient	-20 / +75 °C	-40 / +75 °C	T150°C	-
		of fluid				

4 - PESO CLASSIFICATION AND TEMPERATURES

The PESO certification requires the classification of the electrical equipment only.

Duplomatic supplies valves with PESO certified coils, suitable for application and installation in potentially explosive atmospheres. The mechanical construction of the coil housing is made in order to ensure its resistance to possible internal explosion and to avoid any explosion propagation to the outside environment, matching an “Ex db” type protection (explosion-proof coil).

Moreover, the solenoid is designed to maintain its surface temperature below the limits specified to the relevant class.

The supply always includes the operating and maintenance manual, that contains all the information needed for a correct use of the valve in potentially explosive environment.

4.1 - PESO classification

Certificate of conformity: P480801
The valves are suitable for applications and installations in potentially explosive atmospheres that fall within:

PESO Gb	***KPD2**	equipment intended for use in areas in which explosive atmospheres caused by gases, vapours, mists are likely to occur occasionally.The means of protection relating to equipment in this category ensure the requisite level of protection, even in the event of frequently occurring disturbances or equipment faults which normally have to be taken into account.

4.2 - PESO marking

There is a plate with the PESO mark on each coil.

***KPD2** valves	for gas	Ex db IIC T4 Gb (-40°C Ta +80°C)
***KPD2 /T5** valves	for gas	Ex db IIC T5 Gb (-40°C Ta +55°C)

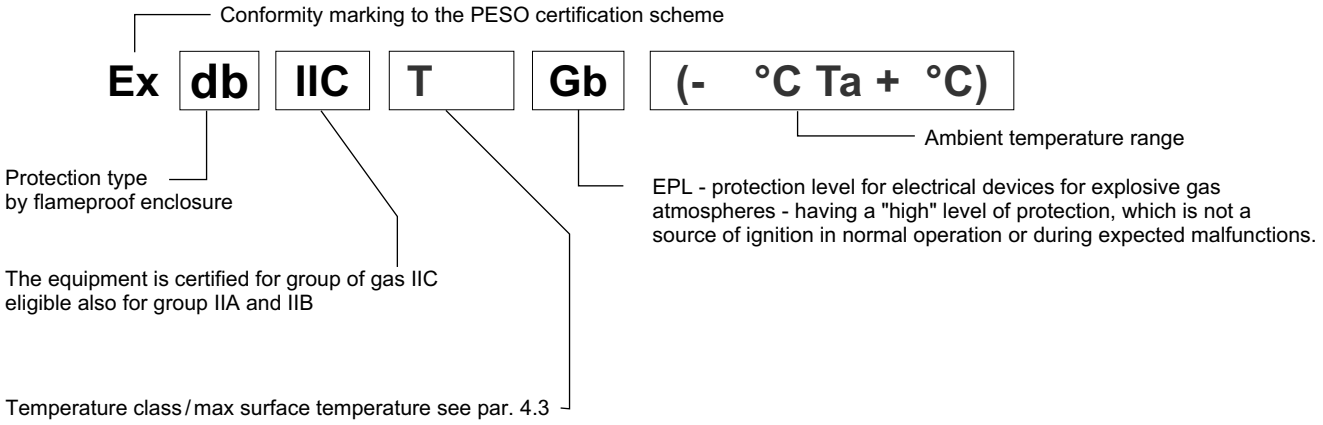

4.3 - Operating temperatures

These valves are classified according to their maximum surface temperature (EN 13463-1), which must be lower than the ignition temperature of the gases, vapors and dusts for which the area in which they will be used is classified.

Valves for surface plants can also be used for less limiting temperature classes (higher surface temperature allowed).

		temperature range	N and V seals	NL seals	Temperature class	eligible also for
PESO Gb	***KPD2**	of ambient	-20 / +80 °C	-40 / +80 °C	T4 (gas)	T3, T2, T1
		of fluid				
	***KPD2 /T5**	of ambient	-20 / +55 °C	-40 / +55 °C	T5 (gas)	T4, T3, T2, T1
		of fluid	-20 / +60 °C	-40 / +60 °C		

DUPLOMATIC MOTION SOLUTIONS
DUPLOMATIC MS S.p.A.
via M. Re Depaolini 24 ▪ 20015 PARABIAGO (MI) ▪ ITALY
tel. +39 0331.895.111 ▪ www.duplomatic.com ▪ e-mail: sales.exp@duplomatic.com